Version 2 (July, 2013)

Generator & Water Pump Wheel Kit Installation Instructions

Wheel Kit Part No.	Generator / Water Pump Model No.
110004-B	*G2800I, EG301A*
110004-C	*EG511A, EG711A, G12000R*
110004-D	*EW220R, EW320R, EW320TR*

WARNING

Read and follow all cautions, warnings and instructions in the Generator or Water Pump Instruction Manual before assembling wheel kits or performing any work or maintenance on your generator or water pump. Failure to do so could result in property damage, serious personal injury or death.

Generator & Water Pump Wheel Kit Component List

Component Part Reference No.	Component Part No.	Description	110004-B Wheel Kit Quantity	110004-C Wheel Kit Quantity	110004-D Wheel Kit Quantity
1	110004-4G3	Hex Bolt 5/16"-18 x 3/4"	4	4	4
2	110004-4G4	5/16"-18 Nylon Nut	8	8	8
3	110004-4G5	5/16" I.D. Steel Washer	8	8	8
4	110004-4G6	Handle	2	2	2
5	110004-4G8	Axle (Short)	1	-	1
6	110004-4G9	5/8" I.D. Steel Washer	2	2	2
7	110004-4G10	Split Pin	2	2	2
8	110004-4G11	Tubeless Tire	2	2	2
9	110004-4G12	Handle Grip	2	2	2
10	110004-4G14	3/4" I.D. x 1" Thin Wall Hose	-	-	2
11	110004-4G15	3/4" I.D. x 2-1/2" Plastic Pipe	2	2	2
12	110004-4G18	Handle Clamp (Short)	-	-	4
13	110004-4G19	Handle Clamp (Long)	4	4	4
14	110004-4G21	Axle (Long)	-	1	1
15	110004-4B01	Axle Bracket I	2	2	-
16	110004-4B02	Axle Bracket II	-	2	-
17	110004-4B03	Axle Bracket III	-	-	2
18	110004-4S01	G2800I Handle Spacer	2	-	-
19	110004-4HB1	Hex Bolt 5/16"-18 x 1-3/4"	4	4	4
20	110004-HN	High Nut	-	4	-

(Please note that extra parts may be included in this kit to enable further customization of the wheel kit. These instructions refer to standard assembly only)

If you are missing any parts, please contact the Makita dealer from whom the kit was purchased for information.

Parts Quick Reference

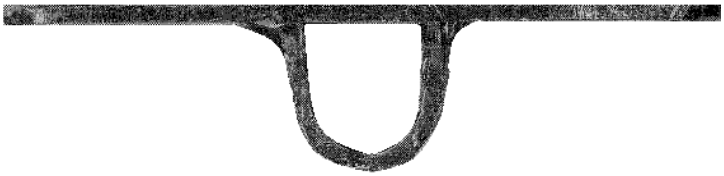

#15 Axle Bracket I

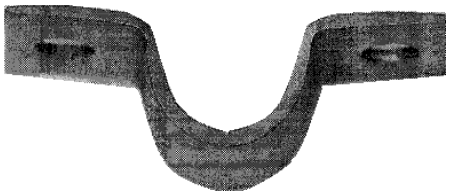

#16 Axle Bracket II

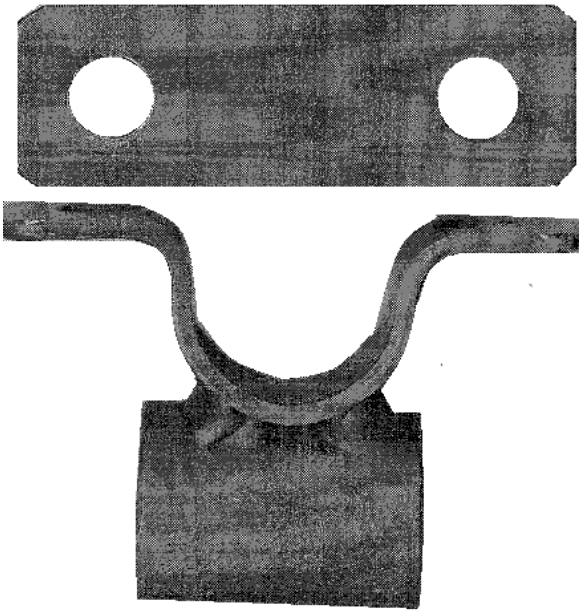

#17 Axle Bracket III

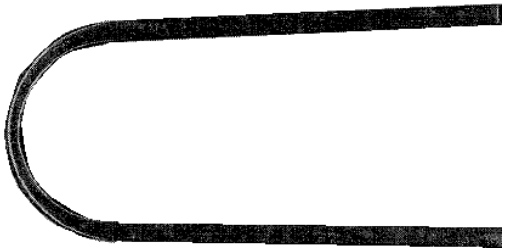

#13 Handle Clamp (Long)

110004-B Assembly Instructions: *(G2800I, EG301A)*

Axle & Wheel Installation

1. Switch engine off.
2. Be sure that all gasoline has been drained from fuel tank.
3. Remove component parts from box and ensure that all are accounted for (refer to component breakdown on p. 1)
4. Using 5/16"-18x3/4" Hex Bolts (#1), 5/16"-18 Nylon Nuts (#2) and 5/16" ID Steel Washer (#3), attach Axle Bracket I (#15) to bottom cross plate of the generator frame. (Refer to Illustration 1.4)
5. Insert Axle (Short) (#5) through brackets.
6. On each end of the axle, insert 3/4" x 2-1/2" Plastic Pipe (#11), 5/8" I.D. Washers (#6) and Tubeless Tire (#8). Push Split Pins (#7) through the holes at the end of the axle and bend to secure. If the holes are not visible, the Plastic Pipe (#11) may be trimmed to provide a better fit. Note that the Pipe must be tight against the frame of the generator and the bolts used to tighten the axle bracket may need to be loosened to allow this.

** If tires have become deflated during shipment, inflate to 30 psi before mounting. **

Handle Installation

7. Raise and support the engine end of the generator to install Handles (#4). Fit the cradle portion of the handles against the bottom of the generator frame. Use the Handle Clamp (Long) (#13), 5/16" I.D. Washer (#3) and 5/16"-18 x 1-3/4" Hex Bolts (#19) to secure Handle to frame. One Handle Clamp (Long) (#13) should be placed at both the top and bottom on the handle. Refer to Illustration 1.1 & 1.2.

If installing the wheel kit on generator G2800I, refer to step #8.

8. Install Handle Clamp (Long) on handle, as near to the top of the frame as possible. Use the G2800I Handle Bracket (#18) to attach the handle to the bottom of the frame as in step #7. Refer to Illustration 1.3.

110004-C Assembly Instructions; *(EG511A & EG711A)*

Axle & Wheel Installation

1. Switch engine off.
2. Be sure that all gasoline has been drained from fuel tank.
3. Remove component parts from box and ensure that all are accounted for (refer to component breakdown on p. 1).
4. Using 5/16"-18x3/4" Hex Bolts (#1), 5/16"-18 Nylon Nuts (#2) and 5/16" ID Steel Washer (#3), attach Axle Bracket I (#15) to bottom cross plate of the generator frame. Refer to Illustration 1.4.
5. Insert Axle (Long) (#14) through brackets.
6. On each end of the axle, insert 3/4" x 2-1/2" Plastic Pipe (#11), 5/8" I.D. Washers (#6) and Tubeless Tire (#8). Push Split Pins (#7) through the holes at the end of the axle and bend to secure. If the holes are not visible, the Plastic Pipe (#11) may be trimmed to provide a better fit. Note that the Pipe must be tight against the frame of the generator and the bolts used to tighten the axle bracket may need to be loosened to allow this.

** If tires have become deflated during shipment, inflate to 30 psi before mounting. **

Handle Installation

7. Raise and support the engine end of the generator to install Handles (#4). Fit the cradle portion of the handles against the bottom of the generator frame. Use the Handle Clamp (Long) (#13), 5/16" I.D. Washer (#3) and 5/16"-18 x 1-3/4" Hex Bolts (#19) to secure Handle to frame. One Handle Clamp (Long) (#13) should be placed at both the top and bottom on the handle. Refer to Illustration 1.1 & 1.2.

110004-C Assembly Instructions; *(G12000R)*

1. Switch engine off.
2. Be sure that all gasoline has been drained from fuel tank.
3. Remove component parts from box and ensure that all are accounted for (refer to component breakdown on p. 1).
4. Take 5/16"-18x1-3/4" bolts (#191), insert through Axle Bracket II (#16) and High Nuts (#20) then thread into bottom cross plate. Repeat for second bracket. Refer to Illustration 1.5
5. Insert Axle (Long) (#14) through brackets.
6. On each end of the axle, insert 3/4" x 2-1/2" Plastic Pipe (#11), 5/8" I.D. Washers (#6) and Tubeless Tire (#8). Push Split Pins (#7) through the holes at the end of the axle and bend to secure. If the holes are not visible, the Plastic Pipe (#11) may be trimmed to provide a better fit. Note that the Pipe must be tight against the frame of the generator and the bolts used to tighten the axle bracket may need to be loosened to allow this.

** If tires have become deflated during shipment, inflate to 30 psi before mounting.**

7. Raise and support the engine end of the generator to install Handles (#4). Fit the cradle portion of the handles against the bottom of the generator frame. Use the Handle Clamp (Long) (#13), 5/16" I.D. Washer (#3) and 5/16"-18 x 1-3/4" Hex Bolts (#19) to secure Handle to frame. One Handle Clamp (Long) (#13) should be placed at both the top and bottom of the handle. Refer to Illustration 1.1 & 1.2.

110004-D Assembly Instructions; *(EW220R, EW320R & EW320TR)*

1. Switch engine off.
2. Be sure that all gasoline has been drained from fuel tank.
3. Remove component parts from box and ensure that all are accounted for (refer to component breakdown on p. 1).
4. Wrap one piece of 3/4" x 1" Thin Wall Hose (#10) over the frame at a point near the output end of the Water Pump. Place Axle Bracket III (#17) over the tubing, using a hammer to knock into place if necessary. Secure the Axle Bracket III (#17) by using the 5-1/6"-18 x 3/4" Hex Bolts (#1), 5/16" I.D. Washers (#3) and 5/16" Nylon Nuts (#2) to tighten the bracket against the plate.
5. Insert Axle (Long) (#14) through brackets.
6. On each end of the axle, insert 3/4" x 2-1/2" Plastic Pipe (#11), 5/8" I.D. Washers (#6) and Tubeless Tire (#8). Push Split Pins (#7) through the holes at the end of the axle and bend to secure. If the holes are not visible, the Plastic Pipe (#11) may be trimmed to provide a better fit. Note that the Pipe must be tight against the frame of the generator and the bolts used to tighten the axle bracket may need to be loosened to allow this. Refer to Illustration 1.6.

** If tires have become deflated during shipment, inflate to 30 psi before mounting.**

7. Raise and support the engine end of the water pump to install handles. Fit the cradle portion of the handles (# 6) against the bottom of the water pump frame. Use the Handle Clamp (Short) (#12), 5/16" I.D. Washer (#3), 5/16"-18 x 1 -3/4" Hex Bolts (#19) and 5/16" Nylon Nuts (#2) to secure Handle to frame. One Handle Clamp (Long) should be placed at both the top and bottom of the handle. Refer to Illustration 1.1 and 1.2.

Illustration 1.1 - Frame and Handle Assembly

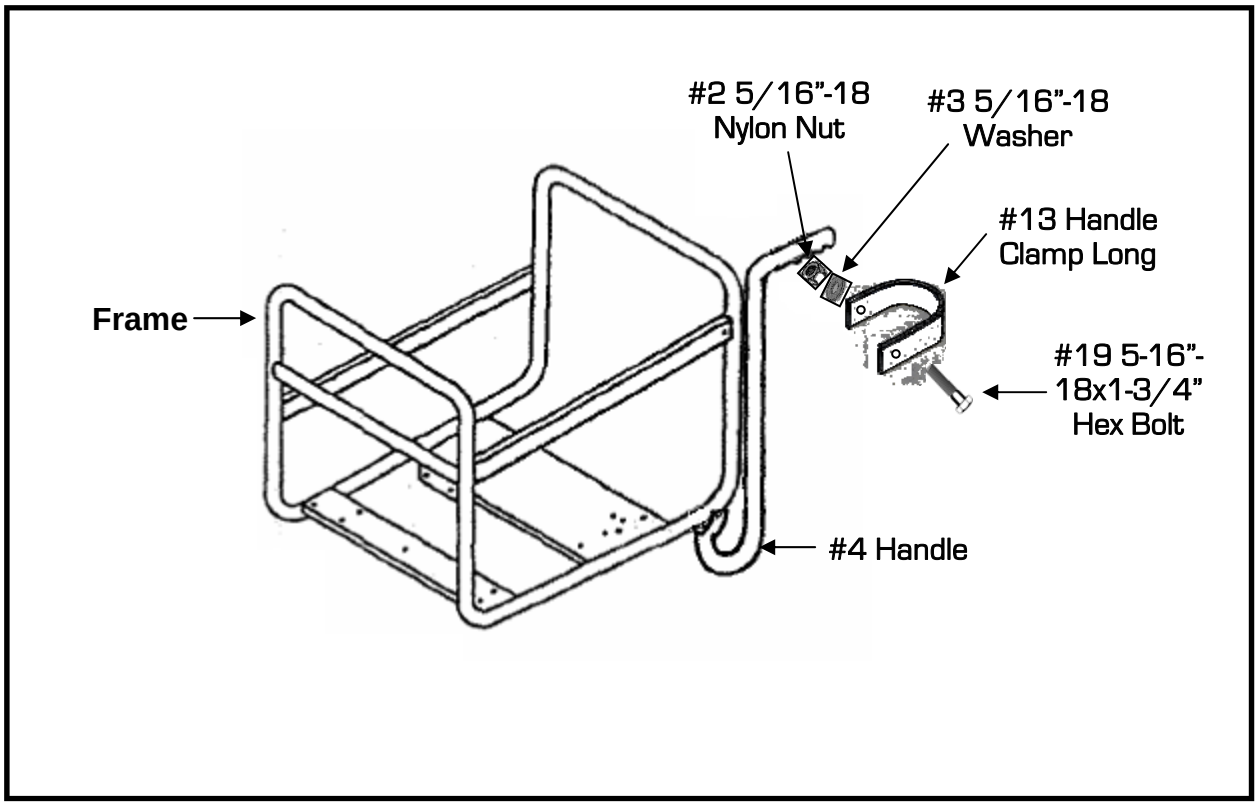

Illustration 1.2 - Frame and Handle Assembly

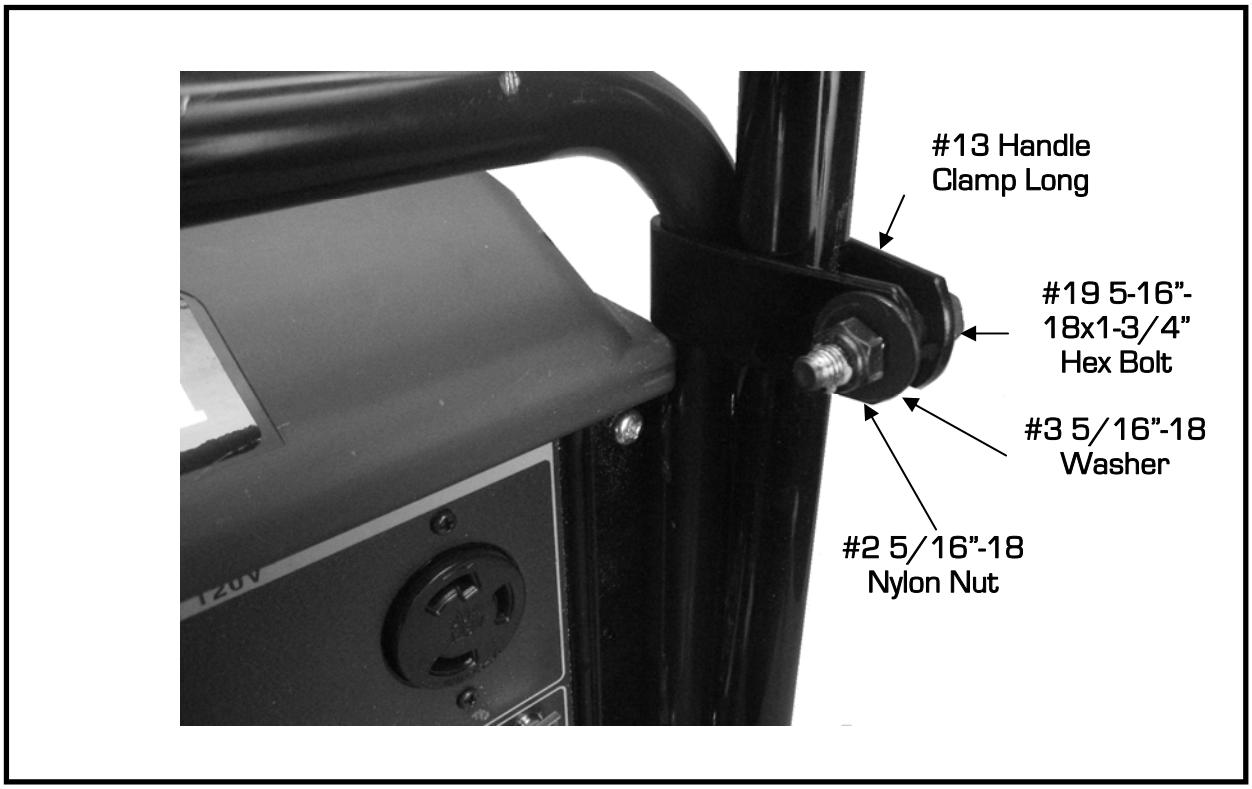

Illustration 1.3 - Detail of G2800I Bracket Assembly

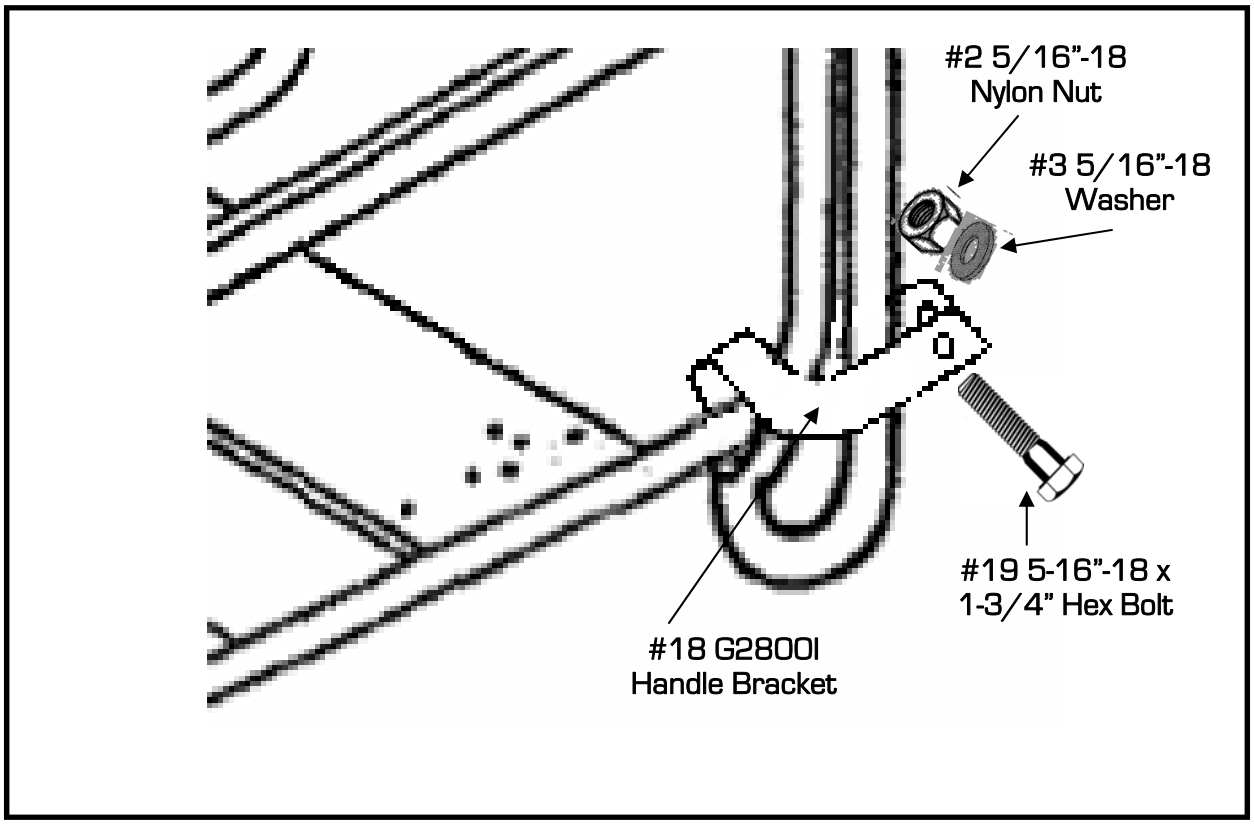

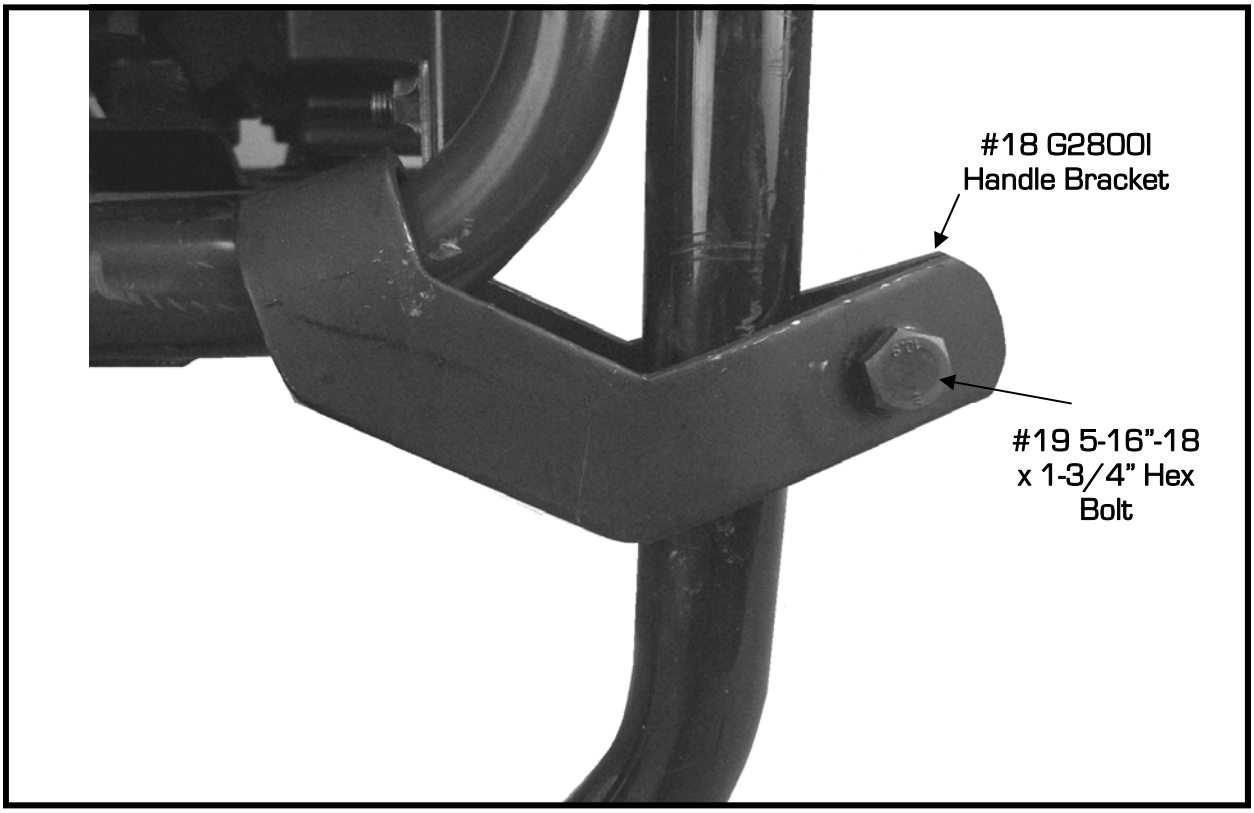

Illustration 1.4 - Wheel and Axle Assembly

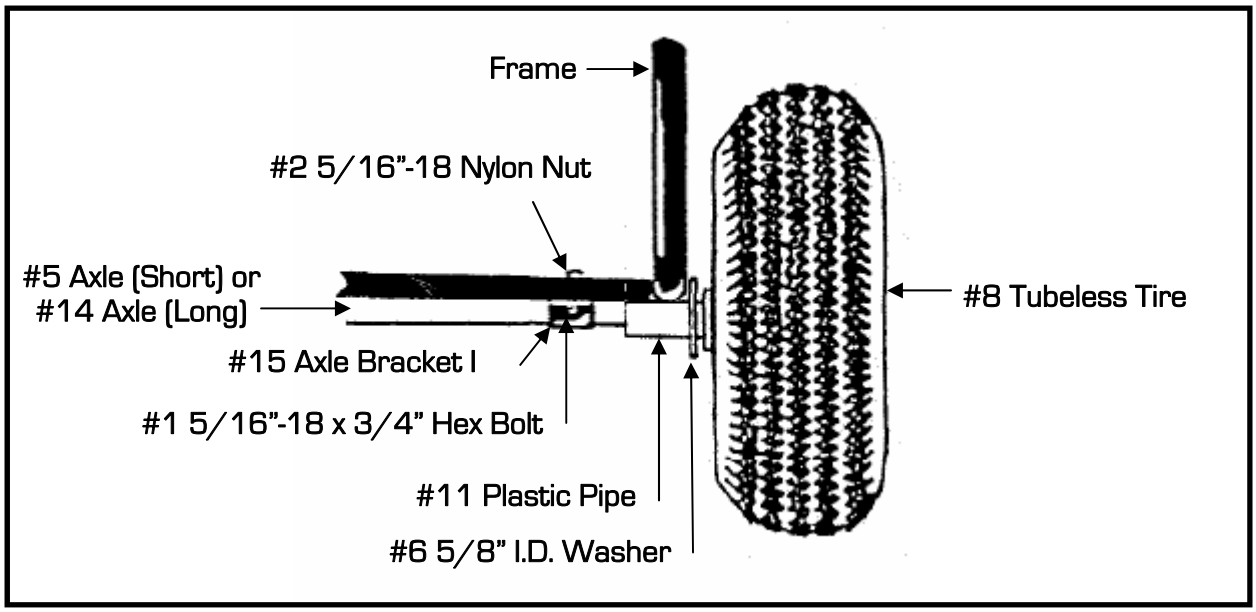

Illustration 1.5 - G12000R Axle Bracket Assembly

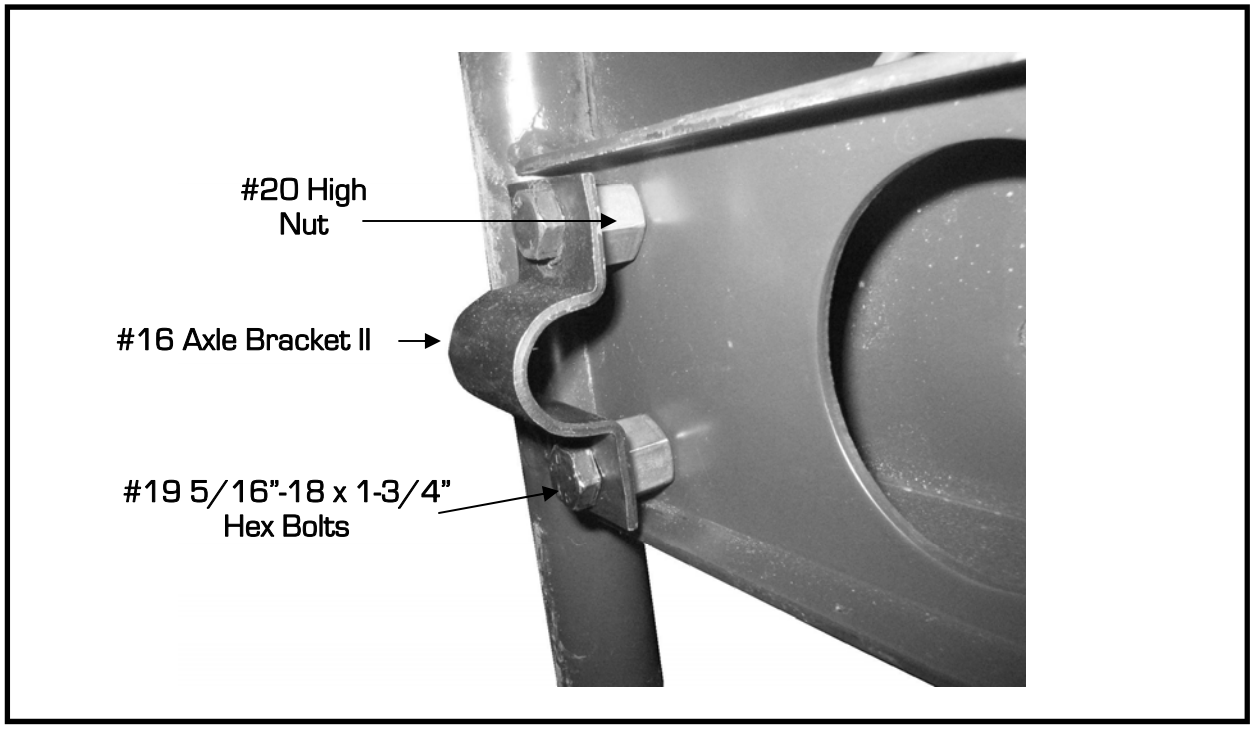

Illustration 1.6 - Axle Bracket III Assembly

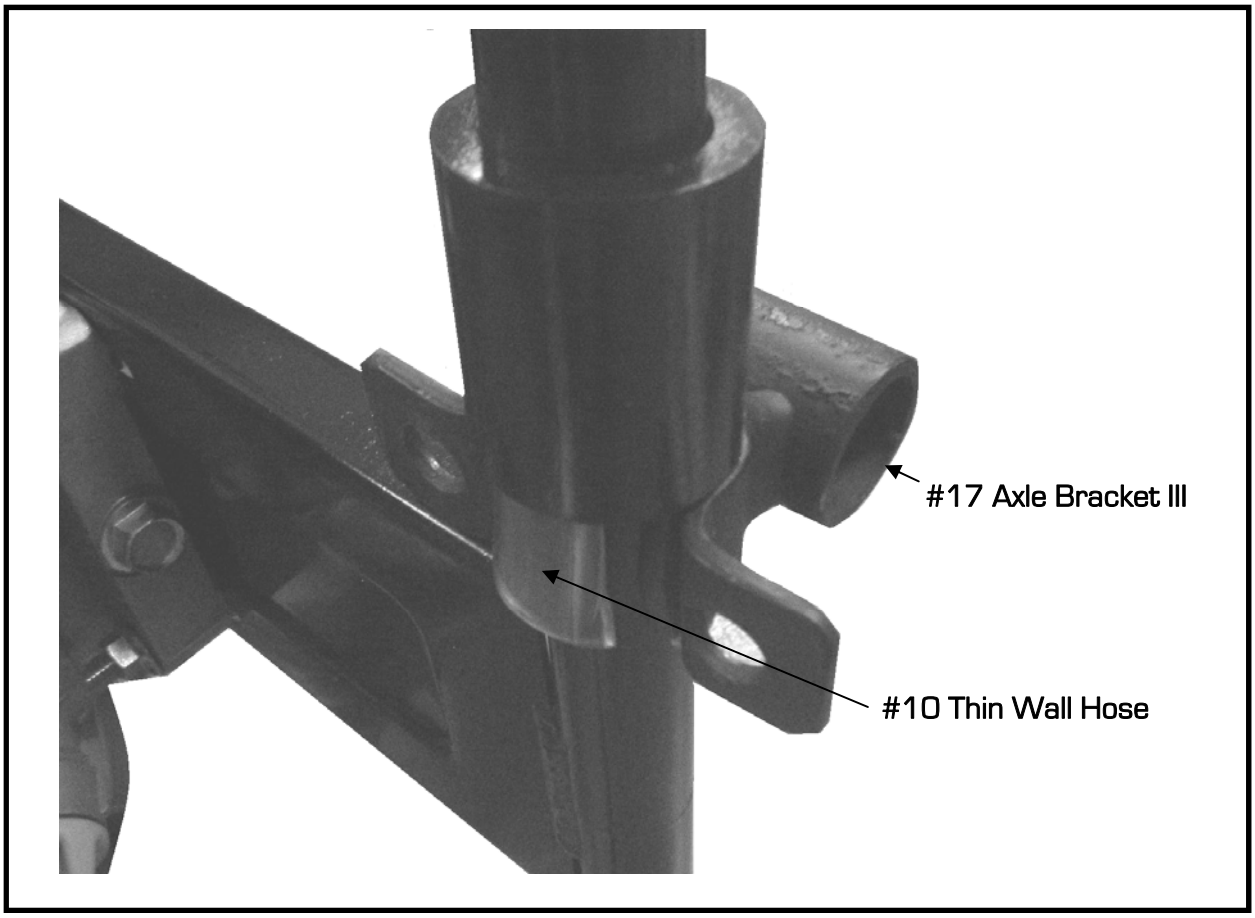

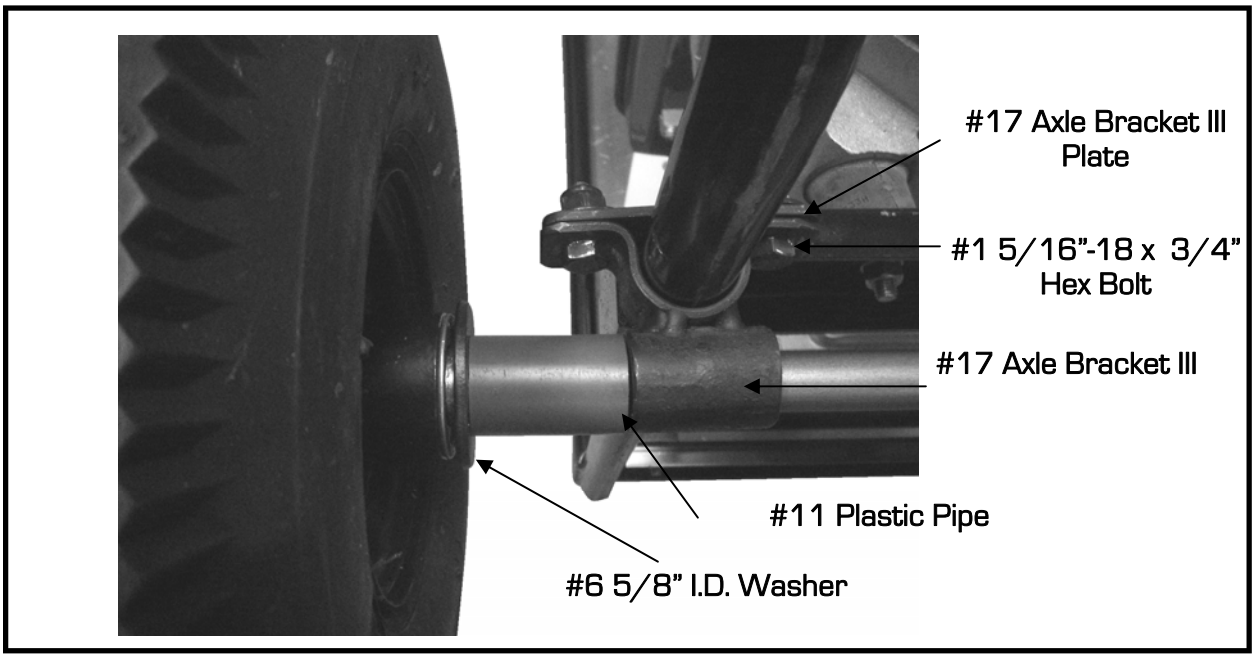

Quebec Notice — Warranty of Availability (Bill 29)
Avis (Québec) — Garantie de disponibilité (projet de loi 29)

For Québec customers only:
Pour les clients du Québec seulement :

NOTICE TO QUÉBEC CONSUMERS – Warranty of availability of replacement parts, repair services and related maintenance/repair information. *Please note that while Makita Canada Inc. ("Makita") makes reasonable efforts to have replacement parts and/or maintenance/repair information available for certain products, please note that Makita does not guarantee the availability of replacement parts, repair services or maintenance/repair information within the meaning of section 39 of the Quebec Consumer Protection Act and sections 79.18 to 79.20 of the Regulation Respecting the Application of the Consumer Protection Act, for any Makita® products manufactured, imported, distributed, advertised, offered for sale and/or sold in Quebec (whether through authorized dealers, or any other distribution channel).*	***AVIS AUX CONSOMMATEURS DU QUÉBEC – Garantie de disponibilité des pièces de rechange, services de réparation, et renseignements relatifs à l'entretien et à la réparation.*** *Bien que Makita Canada Inc. (« Makita ») déploie des efforts raisonnables afin de rendre disponibles les pièces de rechange et/ou les renseignements relatifs à l'entretien ou à la réparation de certains produits, Makita ne garantit pas la disponibilité des pièces de rechange, des services de réparation ou des renseignements nécessaires à l'entretien ou à la réparation au sens de l'article 39 de la Loi sur la protection du consommateur du Québec et des articles 79.18 à 79.20 du Règlement d'application de la loi sur la protection du consommateur pour aucun produit Makita^MD fabriqué, importé, distribué, annoncé, offert en vente et/ou vendu au Québec (que ce soit par l'intermédiaire de détaillants autorisés ou d'autres voies de distribution).*